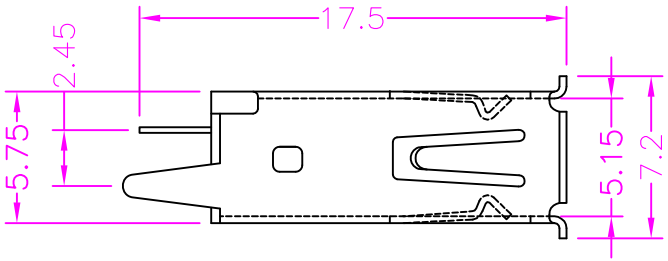

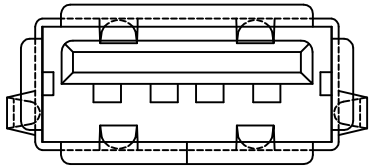

MATERIALS

HOUSING: HI–TEMP. PLASTIC (UL 94V–0)
SHELL: COPPER ALLOY, NICKEL PLATING
TERMINAL: COPPER ALLOY, GOLD PLATED ON CONTACT AREA
TIN PLATING ON SOLDER TAIL

SPECIFICATION

CURRENT RATING: 1 AMP MAX
DIELECTRIC WITHSTANDING: 500V AC FOR ONE MINUTE
CONTACT RESISTANCE: 30m OHMS MAX
INSULATION RESISTANCE: 1000M OHMS MIN AT DC 500V
OPERATION TEMPERATURE: –25°C~+85°C

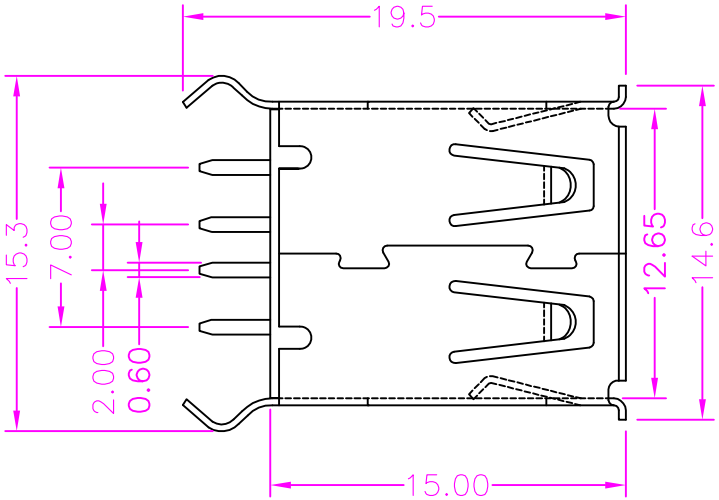

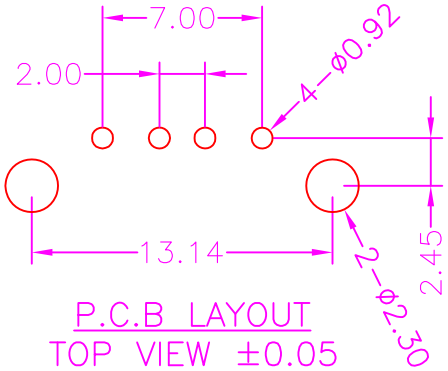

P.C.B LAYOUT
TOP VIEW ±0.05

PART NUMBER:
2USAA – 0 4 * T – 1 1 0

SERIES
NO. OF POS.
CONTACT PLATED OPTION
1: GOLD FLASH
3: 3u" GOLD
5: 5u" GOLD
TIN PLATING ON SOLDER TAIL
TRAY PACKAGE

REV.	DESCRIPTION	DATE
A	RELEASE	2011.8.12

Cyberconn Technology Co., Ltd.
www.cyberconn.com.tw Tel:+886-3-4951314

TOLERANCES	TITLE	USB CONNECTOR SERIES USB A TYPE, PCB MOUNT, VERTICAL, METAL SHIELD FEMALE				
X.X ±0.3 X.XX ±0.2 X.XXX ±0.1 Angle ±5°	DRAWED BY	CHECKED BY	APPROVED BY			
	Janice	Lion	Benson			
	UNIT	SCALE	SIZE	DRAW NO.	REV.	Sheet
10006&10057	MM	NONE	A4	2USAA–001	A	1/1